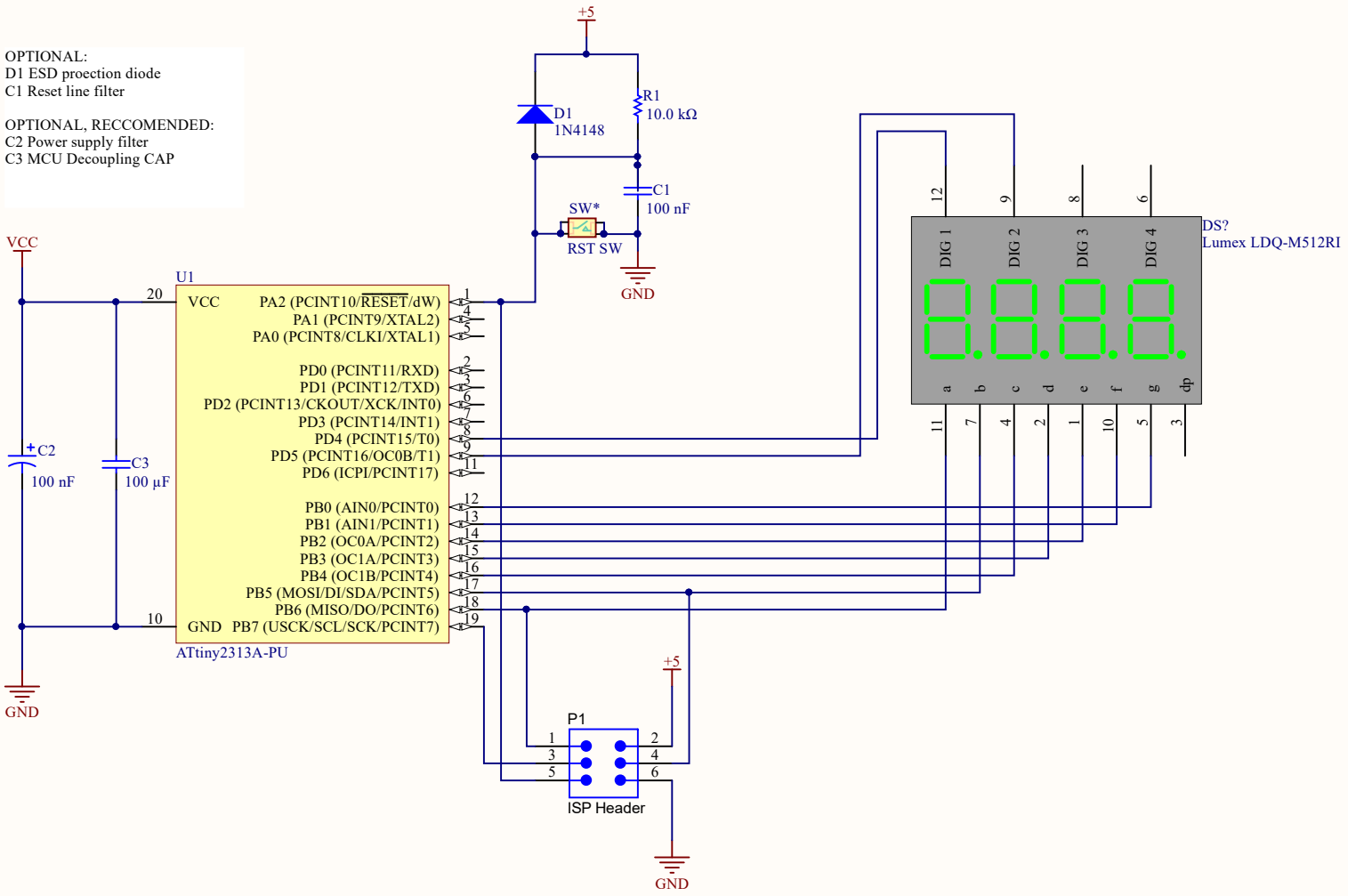

Title	*Seven Segment Display*		
Size: A4	Number:	Revision:	
Date: 29/05/2016	Time: 4:19:33 PM	Sheet of	
File: SevenSegment.SchDoc			

CIRCUITMAKER